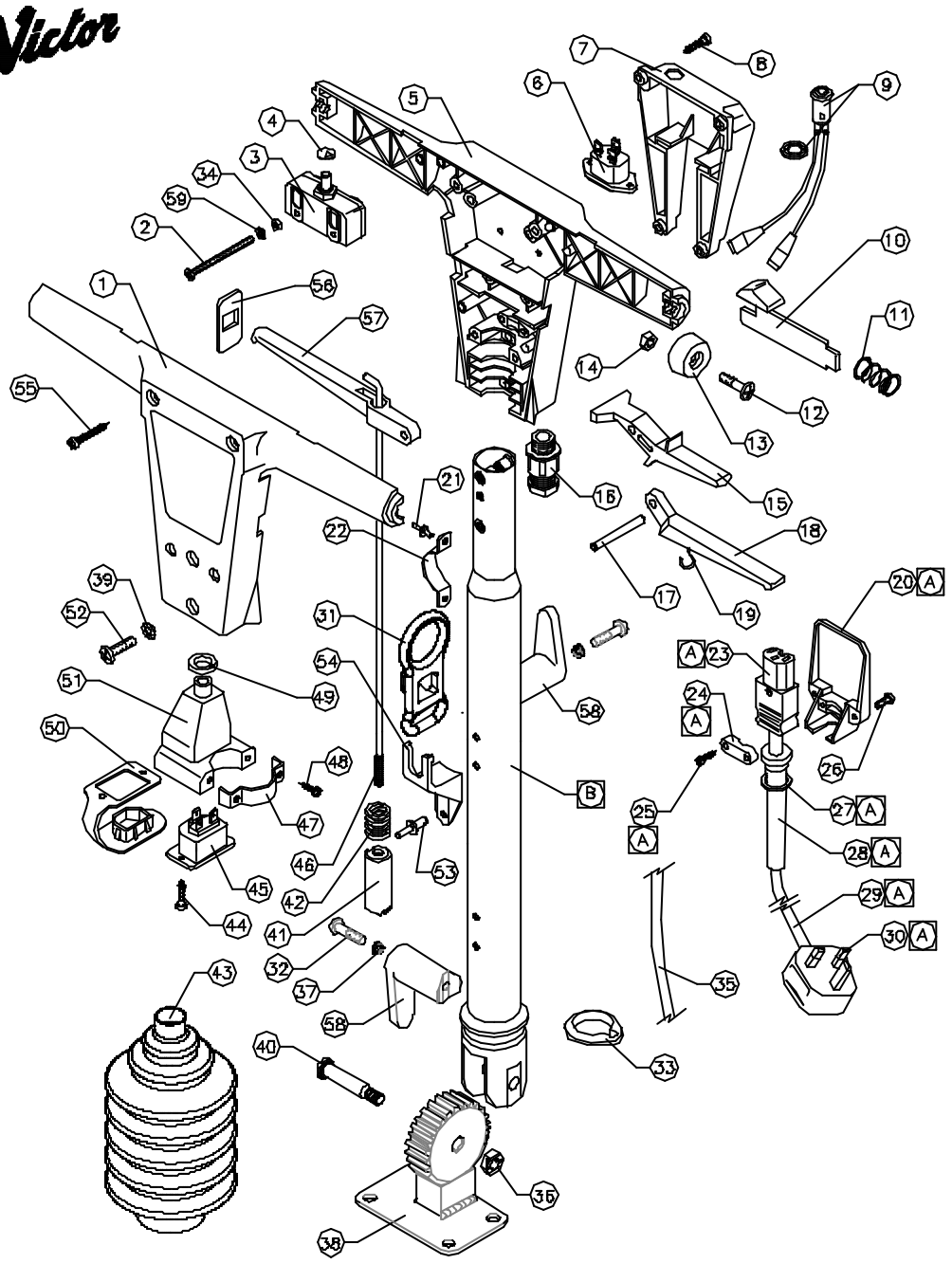

DOWDING & PLUMMER Ltd.

CALTHORPE HOUSE, STOCKFIELD ROAD,
BIRMINGHAM B27 6AP – ENGLAND
TEL: 0121–706–5771 FAX: 0121–708–1052

WHEN ORDERING PLEASE QUOTE PART No. AND PART DESCRIPTION

AYH1811 – EUROPA HANDLE ASSY 220/240V

M.TONKS 15/04/03 11:53 PL137-4