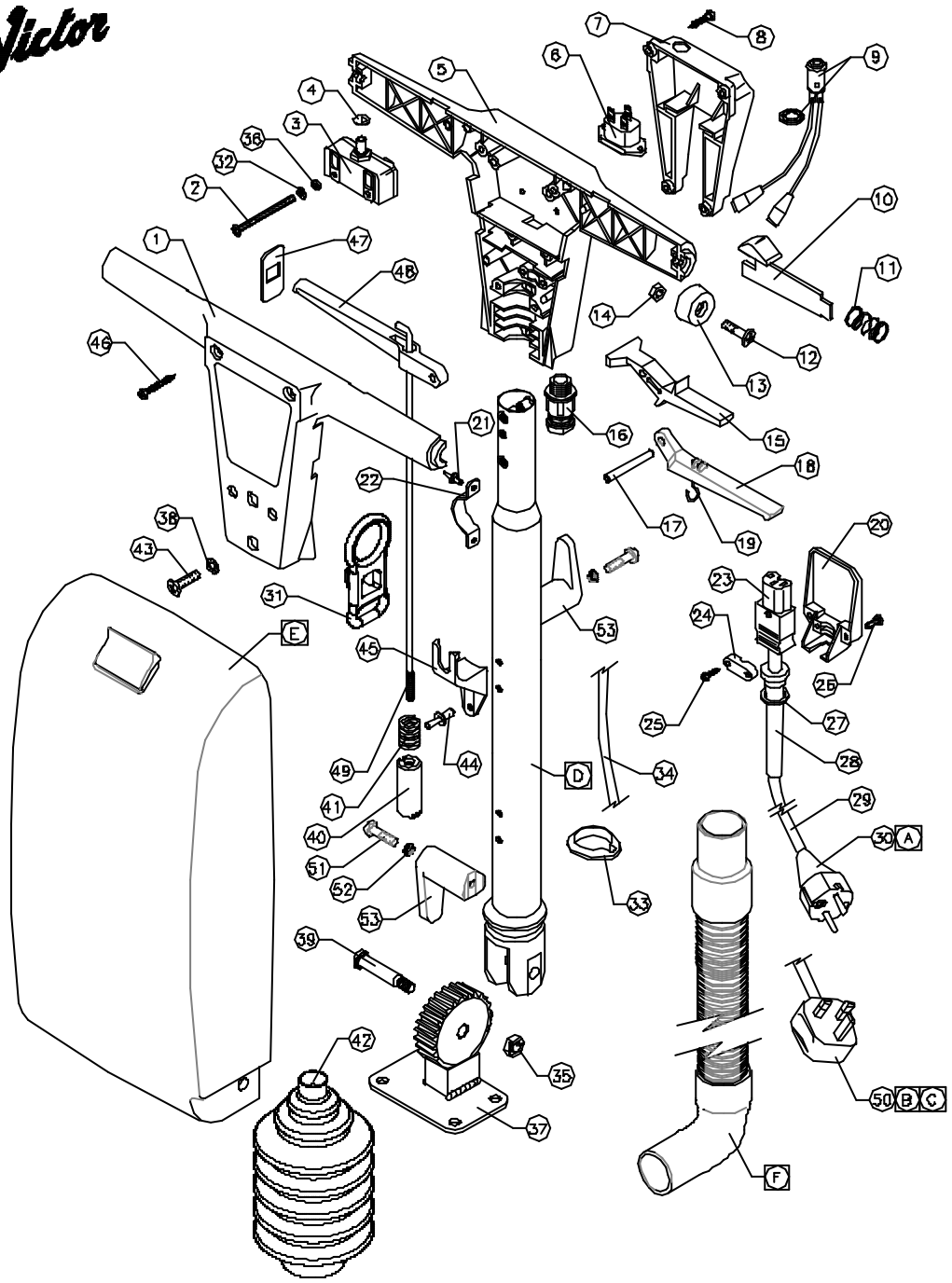

M.TONKS 15/04/03 12:16 PLZ00-5

DOWDING & PLUMMER Ltd.

CALTHORPE HOUSE, STOCKFIELD ROAD,
BIRMINGHAM B27 6AP – ENGLAND
TEL: 0121-706-5771 FAX: 0121-708-1052

WHEN ORDERING PLEASE QUOTE PART No. AND PART DESCRIPTION

AYH1600 – AIRFLOW HANDLE ASSY 220/240V