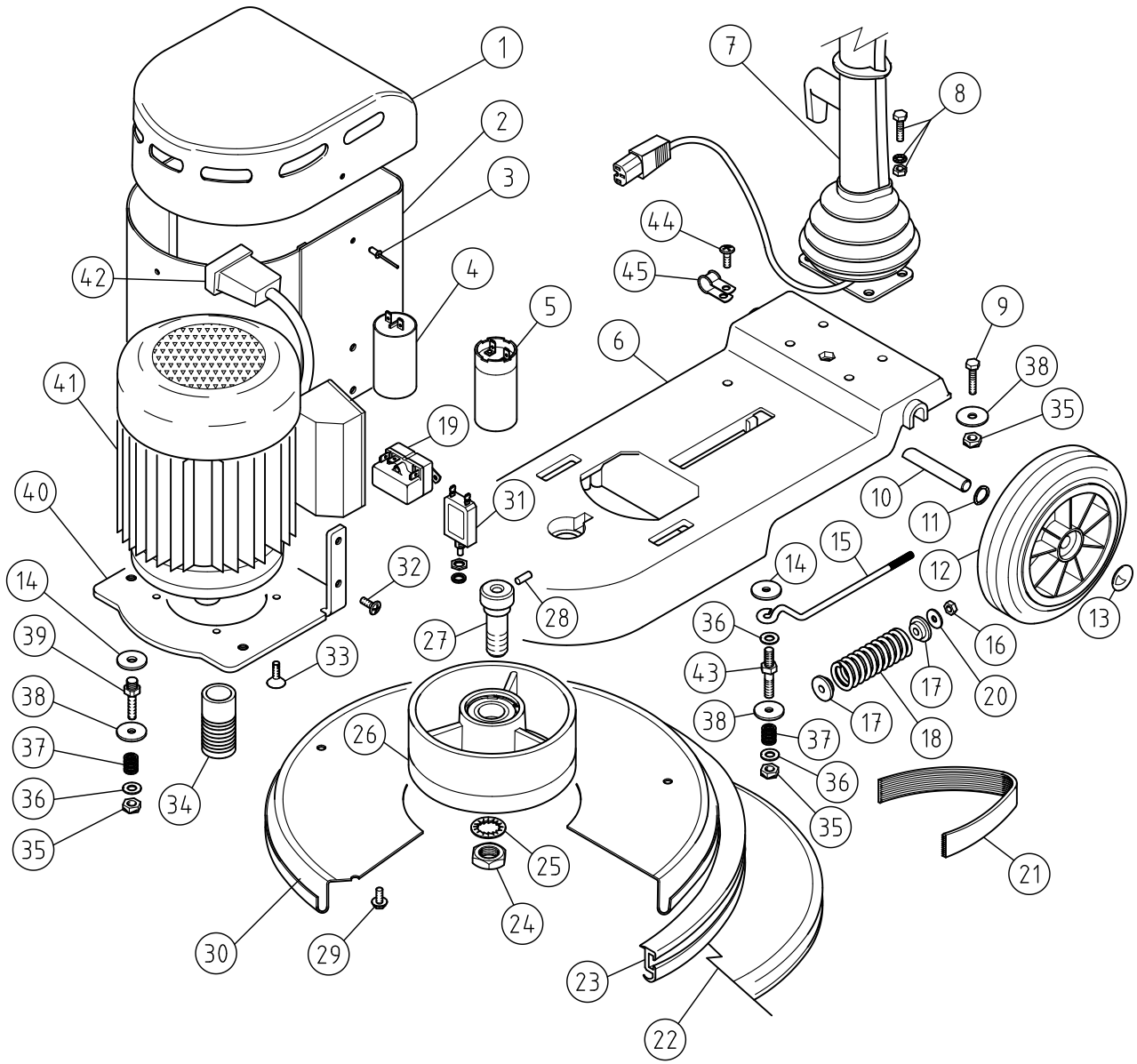

ITEM	PART No.	QTY.	DESCRIPTION
1	D1280	1	MOTOR COVER
2	D1272/C	1	MOTOR COWL
3	SBI7087	3	BLACK RIVET
4	SBI7211	1	20 TO 30MFD RUN CAPACITOR
5	SBI5227	1	80MFD START CAPACITOR
6	A1123	1	BASE CASTING
7	AYH1818	1	HANDLE ASSEMBLY
8	-	4	M8x30 HEX BOLT, SPRING WASHER AND NUT
9	-	1	M8x35 HEX HEAD BOLT
10	A1657	1	WHEEL AXLE - 325mm LONG
11	SBI3666	2	WAVED WASHER
12	D1123	2	200mm WHEEL - BLACK
13	SBI3005/A	2	12mm STARLOCK CAP
14	-	2	M10x30 PLAIN WASHER
15	A1377	1	CRANKED EYEBOLT
16	-	1	M6 NUT
17	A1151	2	SPRING LOCATOR
18	A1159	1	BELT ADJUSTING SPRING
19	SBI3659	1	START RELAY TYPE 234
20	-	1	M6 WASHER
21	SBI3357	1	DRIVE BELT 220J12
22	VB45141	1	450 CENTREFLEX DRIVE BOARD
23	A1753/B/BL	1	Q/R BUFFER RING - 1400mm
24	-	1	M20 HALF NUT
25	-	1	M20 SHAKEPROOF WASHER
26	AYP1016	1	156mm DRIVE PULLEY ASSEMBLY
27	A1674	1	CENTRE FEED PULLEY BOLT
28	SBI5550	1	SELOCK PIN
29	-	5	M6x12 HEX HEAD TAPTITE SCREW
30	B1053/GH	1	SPR 450 BRUSH COVER
31	SBI5498	1	CIRCUIT BREAKER 10AMP
32	-	4	M6x12 BLACK POZIDRIVE PANHEAD SCREW
33	-	4	M8x20 COUNTERSUNK HEAD SOCKET SCREW
34	C4140	1	MOTOR PULLEY 32mm THREADED
35	-	4	M8 BINX NUT
36	-	3	M8 PLAIN WASHER
37	A2132	3	MOTOR STUD SPRING
38	A1378	4	WASHER (30x9x2.5)
39	D1321	2	M10 MOTOR STUD
40	C4087/GH	1	D90 MOTOR MOUNTING PLATE
41	AYM4021	1	1.5Kw MOTOR - THREADED SHAFT
42	D1214	1	SOCKET LEAD
43	A1223	1	M8 MOTOR STUD
44	-	1	M6 PANHEAD TAPTITE SCREW
45	SBI7080	1	6mm 'P' CLIP

agd 15.07.09

WHEN ORDERING PLEASE QUOTE PART No. AND PART DESCRIPTION

VICTOR 2008 RANGE	SPRITE 450 HIGH SPEED c/w DRIVE BOARD	VR-S450H